mmTron
Unleashing the mmWave Frontier

TMC811-1D
2-18 GHz Low Loss Balun

Product Features

- RF frequency: 2 to 18 GHz
- Insertion Loss: 2 dB
- Amplitude Balance: 0.4 dB
- Phase Balance: 1 deg
- High Power Handling
- Die Size: X=1250 um, Y=2170 um, Z=100 um
- Package Size: 3x3, 10Lead, 0.5mm pitch DFN

Application

- Instrumentation
- Wireless Communication
- SATCOM
- Radar, EW
- WLAN, WiMax

Product Description

The TMC811-1D is a wideband low loss MMIC balun (balanced to unbalanced transformer) die with an impedance ratio of 1:2 . TMC811-1D is designed for use in 5G wireless, SATCOM, Instrumentation, high-speed track-and-hold amplifiers, digital-to-analog converters, balanced amplifiers, signal integrity and Military Radar and EW applications. The TMC811-1D is a 50 W matched, DC-coupled and ROHS-compliant design. To ensure rugged and reliable operation and moisture protection, the TMC811-1D is designed and fabricated for maximum repeatability with low insertion loss, low amplitude unbalance, low phase unbalance, and excellent common mode rejection. Both bond pad and backside metallization are Au-based that are compatible with ribbon and wedge bonding and high conductivity epoxy and eutectic die attach methods. TMC811-1D is layed out symmetrically and is in die format thus enabling the integration of the balun directly into hybrid modules. DXF drawings and S3P files are available upon request. TMC811-1 is the packaged DFN version.

Electrical Performance				
	min	**Typ**	**Max**	**Units**
Frequency	2		18	GHz
Excess Insertion Loss		2		dB
Return Loss		10		dB
Common Mode Rejection		35		dB
Amplitude Balance		0.4		dB
Phase Match		1		deg

mmTron Inc. reserves the right to make changes to the product(s) or information contained herein without notice
Version 3.5 2025 © mmTron, Inc.

TMC811-1D
2-18 GHz Low Loss Balun

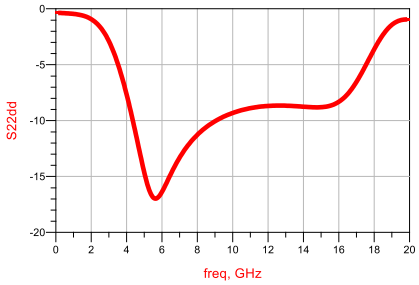

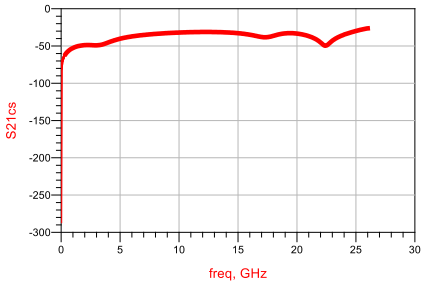

Eqn S22dd=dB(0.5*(S22-S23-S32+S33))

Eqn S21ds=dB((1/sqrt(2))*(S(2,1)-S(3,1)))

Eqn S21cs=dB((1/sqrt(2))*(S(2,1)+S(3,1)))

Eqn CMRR=20*log(S21ds/S21cs)

Eqn Amplitude_Imbalance=dB(-S21/S31)

Eqn Phase_Imbalance=phase(-S21/S31)

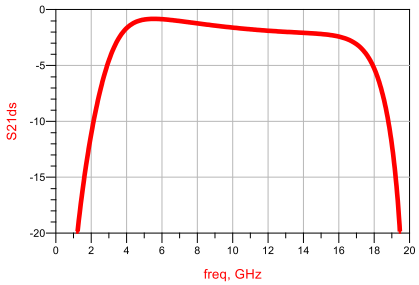

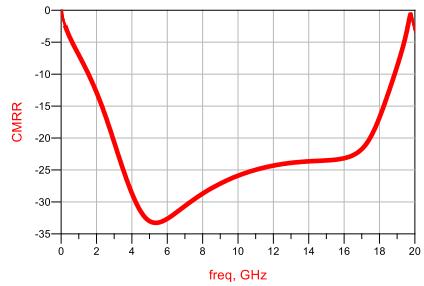

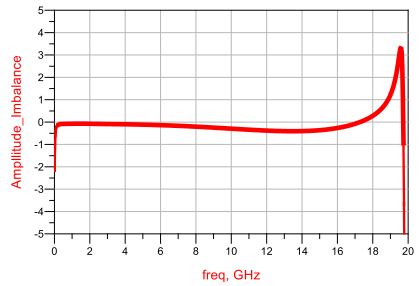

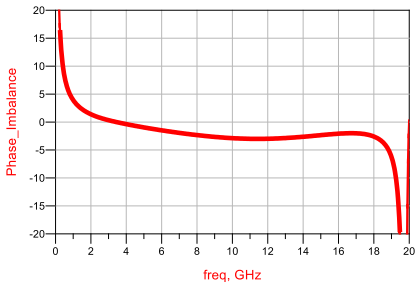

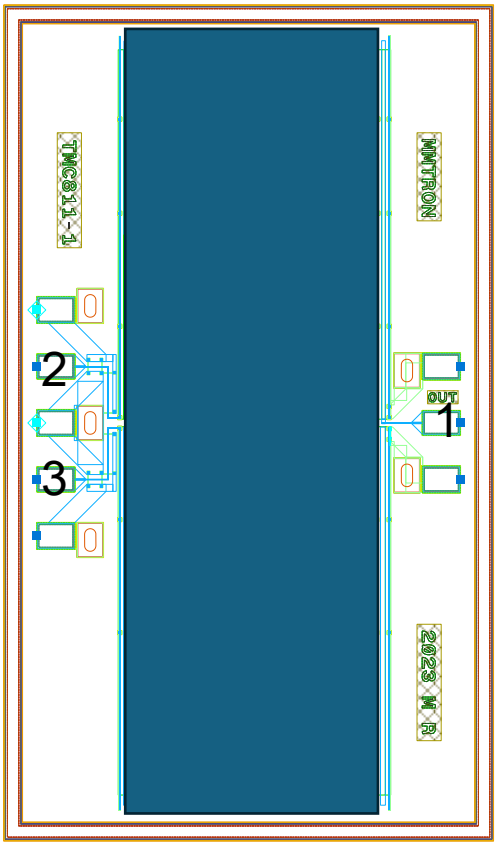

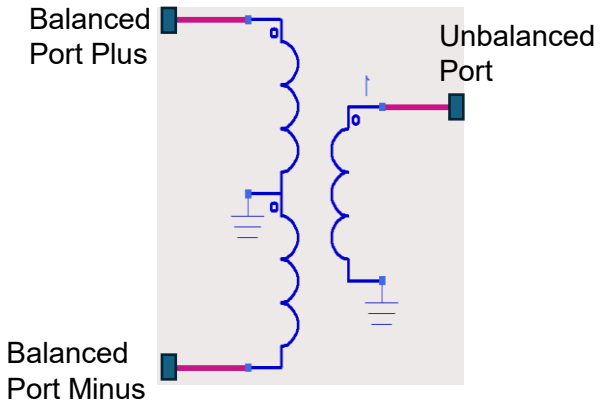

Pad #	Function
1	Unbalanced Common port
2	Balanced Port Plus
3	Balanced Port Minus

Pad 1 is open to ground and pads 2 and 3 are short to ground.

The remaining 5 pads are GND.

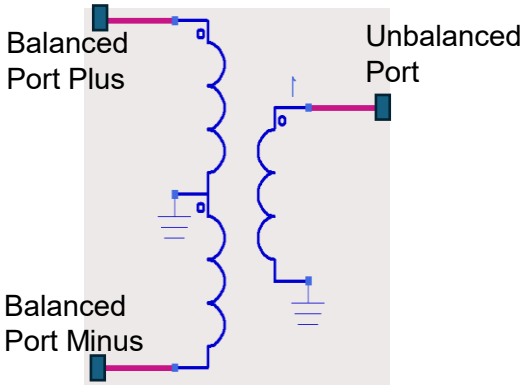

Pad #	Function
8	Unbalanced port
2	Balanced Port Plus
4	Balanced Port Minus
1,3,5,7,9	GND

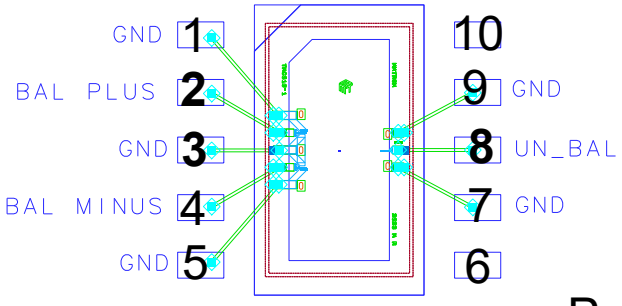

Packaged Version

REVISIONS		
REV	DESCRIPTION	DATE
B	ADDED PACKAGE THICKNESS OPTIONS	4-1-2016

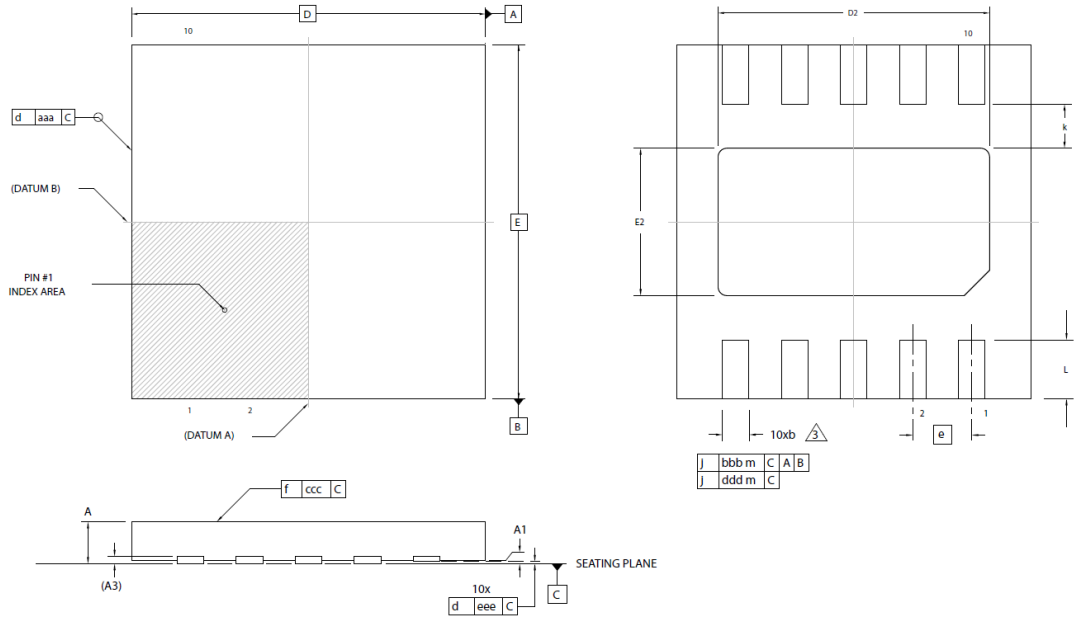

NOTES:
1) ALL DIMENSIONS IN MM
2) DIMENSIONING AND TOLERANCING PER ASME Y14.5-2009
3) DIMENSION b APPLIES TO METALLIZED TERMINAL AND IS MEASURED BETWEEN 0.15 AND 0.30 MM FROM TERMINAL TIP

ALL INFORMATION CONTAINED HEREIN IS THE PROPERTY OF QPTECHNOLOGIES AND IS CONSIDERED PROPRIETARY AND SUBJECT TO RETURN UPON DEMAND. ACCEPTANCE AND RETENTION HEREOF SIGNIFIES AGREEMENT BY THE RECIPIENT THAT THE INFORMATION WILL NOT BE DISCLOSED TO OTHERS NOR USED CONTRARY TO THE INTEREST OF QPTECHNOLOGIES WITHOUT PRIOR WRITTEN PERMISSION.

SYMBOL	MIN	MAX	SYMBOL	MIN	MAX
A, V	0.80	1.00	E2	1.15	1.35
A, W	0.70	0.80	e	0.50 BSC	
A, L	1.40	1.70	k	0.20	-
A1	0.00	0.05	L	0.45	0.55
A3	0.20 REF		aaa	0.10	
b	0.18	0.30	bbb	0.10	
D	3.00 BSC		ccc	0.10	
D2	2.20	2.40	ddd	0.05	
E	3.00 BSC		eee	0.08	

QPTECHNOLOGIES
A DIVISION OF PROMEX INDUSTRIES | QPTECHNOLOGIES.COM

TITLE
DFN 10L 3x3 mm 0.50 PITCH
PACKAGE OUTLINE

LEADFRAME PART NO: 235-00054 — REV C

DO NOT SCALE | FILE NAME 10L-DFN-3x3-50P-MOD.DWG | SHEET 1 OF 1

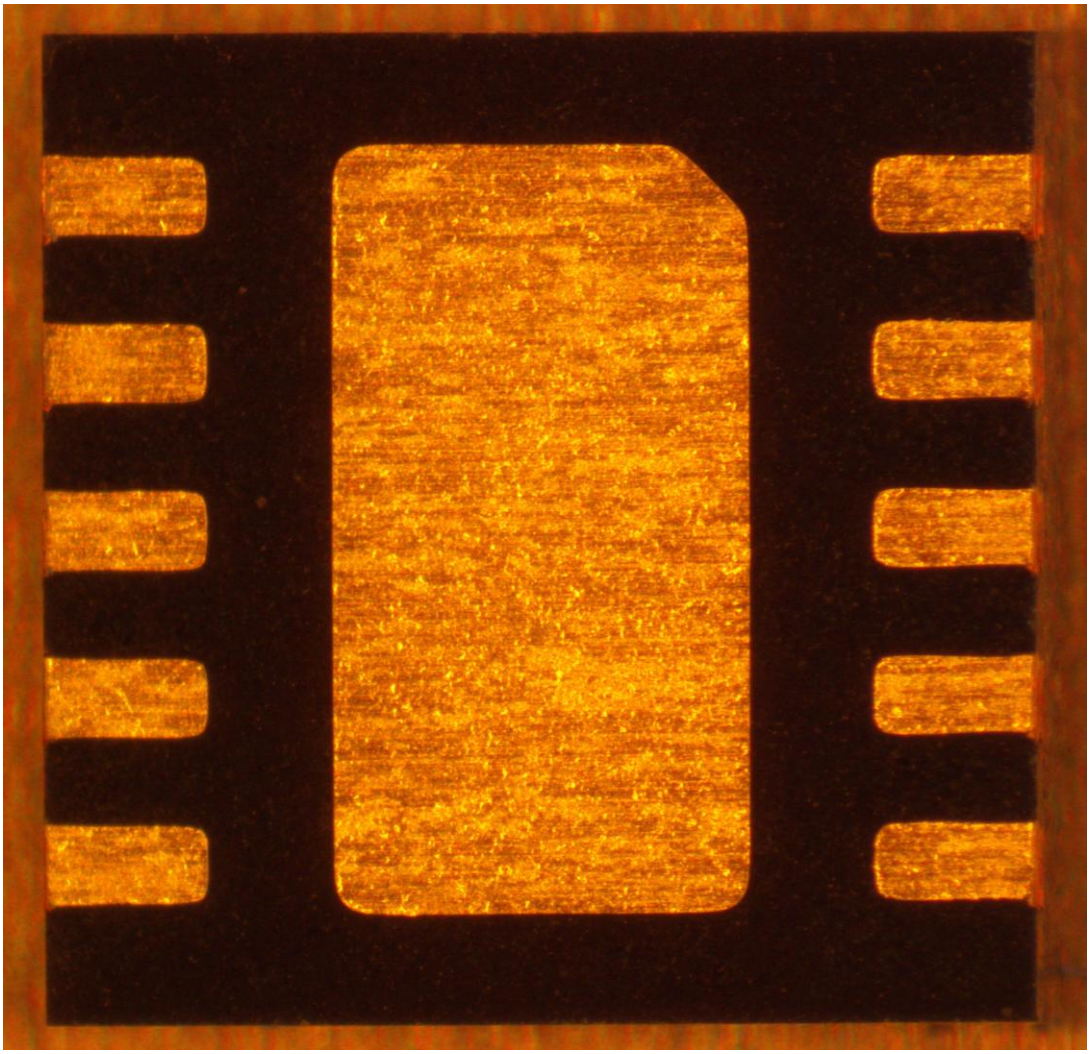

Assembly Techniques

The TMC811-1D is fabricated using a GaAs-based semiconductor material structure. The die is back-metalized and can be mounted with standard assembly techniques. The mounting surface should be clean and flat.

Maximum Ratings

Parameter	Function
Operating Temperature	-55 °C to 100 °C
Input RF Power	35 dBm at 25 °C



Electrostatic Discharge Caution

This integrated circuit can be damaged by ESD. mmTron Inc. recommends that all integrated circuits be handled with appropriate precautions. Failure to observe proper handling and installation procedures can cause damage. ESD damage can range from subtle performance degradation to complete device failure. Precision integrated circuits may be more susceptible to damage because very small parametric changes could cause the device not to meet its published specifications. III-V MMICs are ESD-sensitive. Preventative ESD measures must be employed in all aspects of storage, handling, and assembly. MMIC ESD precautions, handling considerations, and die-attach and bonding methods are critical factors in successful III-V MMIC performance and reliability.



RoHS Compliant

This part is RoHS compliant, meeting the requirements of the EU Restriction of Hazardous Substances Directive 2002/95/EC, commonly known as RoHS. Six substances are regulated: lead, mercury, cadmium, chromium VI (hexavalent chromium), polybrominated biphenyls (PBB), and polybrominated biphenyl ethers (PBDE). RoHS compliance requires that any residual concentration of these substances is below the Directive's maximum concentration values (MCV): cadmium 100ppm by weight and all others 1000ppm by weight.

Disclaimer and Warranty Statement

© 2025 mmTron Inc. (“mmTron”). All rights reserved.

The information contained in this datasheet is for reference only. All specifications are subject to change without prior notice.
Except as provided in its Terms and Conditions of Sale or any separate agreement, mmTron assumes no liability or responsibility whatsoever, including for (i) errors or omissions in these materials; (ii) failure to update these materials; or (iii) conflicts or incompatibilities arising from future changes to specifications and product descriptions, which mmTron may make at any time, without notice. These materials grant no license, express or implied, to any intellectual property rights. THESE MATERIALS ARE PROVIDED "AS IS" WITH NO WARRANTY OR LIABILITY, EXPRESS OR IMPLIED, RELATING TO SALE AND/OR USE OF mmTron PRODUCTS INCLUDING FITNESS FOR A PARTICULAR PURPOSE, MERCHANTABILITY, INFRINGEMENT OF INTELLECTUAL PROPERTY RIGHT, ACCURACY OR COMPLETENESS, OR SPECIAL, INDIRECT, INCIDENTAL, OR CONSEQUENTIAL DAMAGES WHICH MAY RESULT FROM USE OF THESE MATERIALS.

mmTron products are not intended for use in medical, lifesaving or life sustaining applications. mmTron customers using or selling mmTron products for use in such applications do so at their own risk and agree to fully indemnify mmTron for any damages resulting from such improper use or sale. These items are controlled by the U.S. Government and authorized for export only to the country of ultimate destination for use by the ultimate consignee or end-user(s) herein identified. They may not be resold, transferred, or otherwise disposed of, to any other country or to any person other than the authorized ultimate consignee or end-user(s), either in their original form or after being incorporated into other items, without first obtaining approval from the U.S. government or as otherwise authorized by U.S. law and regulations’.
The product layout, and specification are mmTron Proprietary and confidential information. The recipient agrees not to copy, alter, modify, reverse engineer, or attempt to derive the composition or underlying information, structure or ideas of any Confidential Information and must not remove, overprint, deface or change any notice of confidentiality, copyright, trademark, logo, legend or other notices of ownership from any originals or copies of mmTron’s information.