mmTron
Unleashing the mmWave Frontier

TMC248-D
22-30 GHz Driver Amplifier

Product Features

- RF frequency: 22 to 30 GHz
- Linear Gain: 20 dB
- P_{sat}: 27 dBm
- Die Size: X=2.5 mm, Y=1.5 mm, Z=0.1mm
- DC Power: 23 VDC, 60 mA

Applications

- mmWave 5G
- Point-to-Point Radios and VSATs
- Fiber Optics
- Military, EW and Space

Product Description

The TMC248-D GaN Power Amplifier is a high linearity device, designed for use in mmWave 5G, Radios, Military, EW and Space applications. The TMC248-D provides 0.5 W of saturated power from 22 to 30 GHz. The TMC248-D is matched to 50Ω, eliminating the need for RF port matching. Both bond pad and backside metallization are Au-based that is compatible with ribbon and wedge bonding and high conductivity epoxy and eutectic die attach methods. The packaged (6x6 QFN) version is available under TMC248-P6 part number. The dimensions of the ENG die samples are X=3 mm, Y=3mm, and Z=0.1mm.

Electrical Performance : **Vdd = 23 V, Vgg = -4.5 V, TA = 25 °C, F = 27 GHz**				
	min	**Typ**	**Max**	**Units**
Frequency	24		30	GHz
Gain		20		dB
P1dB		26		dBm
Psat		27		dBm
NF		5.5		dB
OIP3		30		dBm
Bias Voltage		23		V
Bias Current		60		mA

mmTron Inc. reserves the right to make changes to the product(s) or information contained herein without notice
Version 3.5 2025 © mmTron, Inc.

TMC248 Measured On Wafer S Parameters

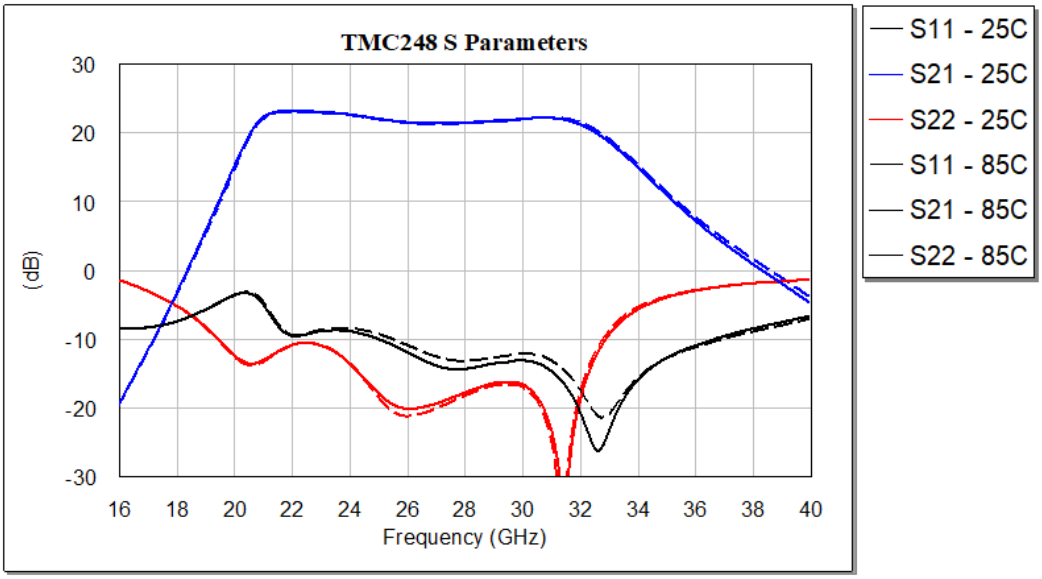

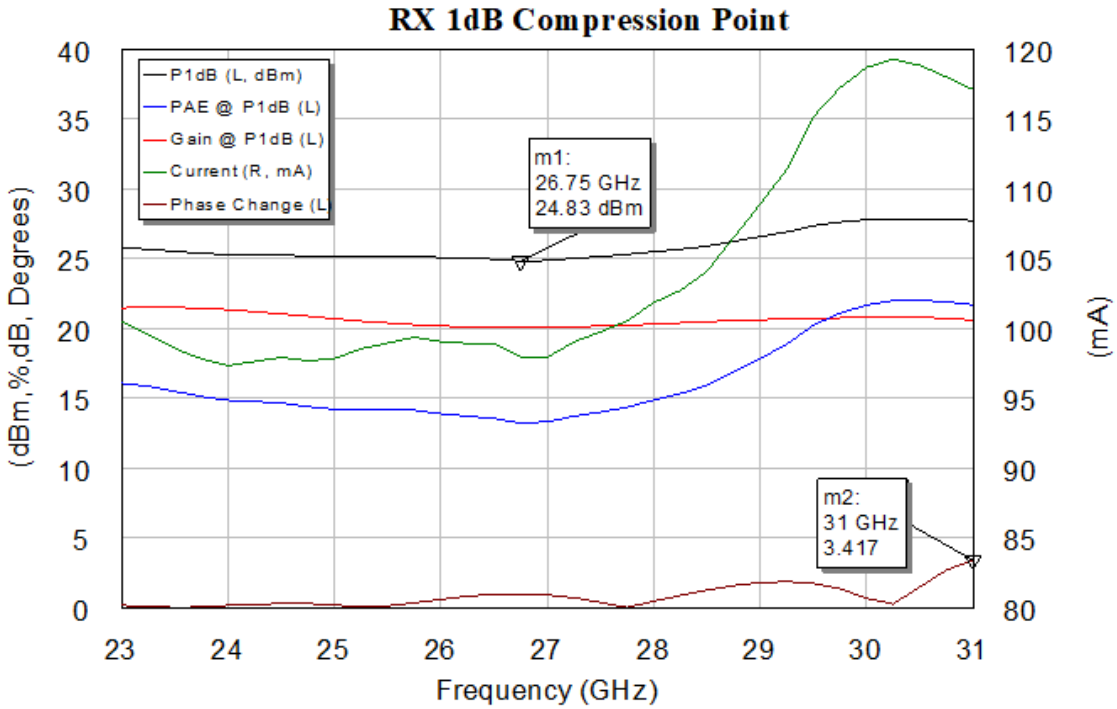

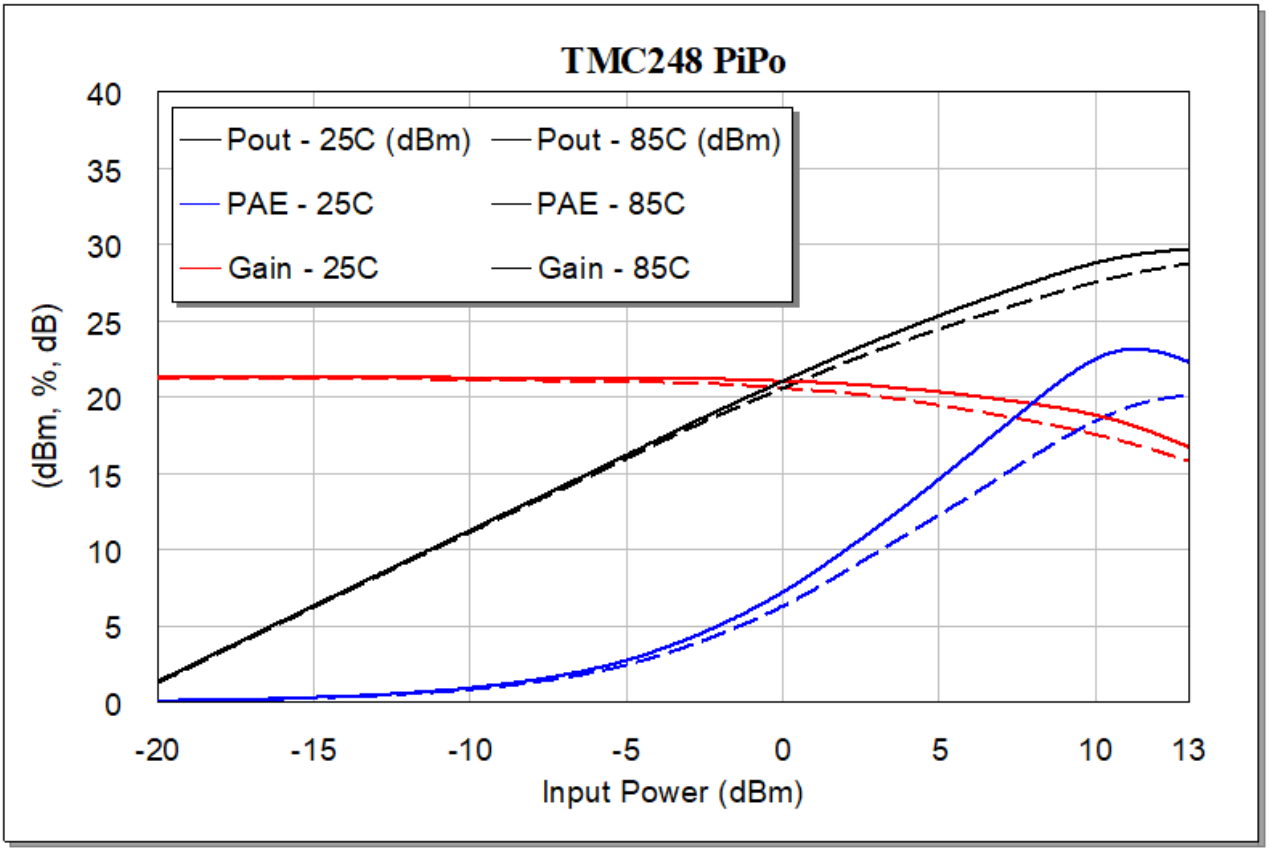
TMC248 PiPo
Pout - 25C (dBm)
Pout - 85C (dBm)
PAE - 25C
PAE - 85C
Gain - 25C
Gain - 85C
(dBm, %, dB)
40
35
30
25
20
15
10
5
0
-20
-15
-10
-5
0
5
10
13
Input Power (dBm)

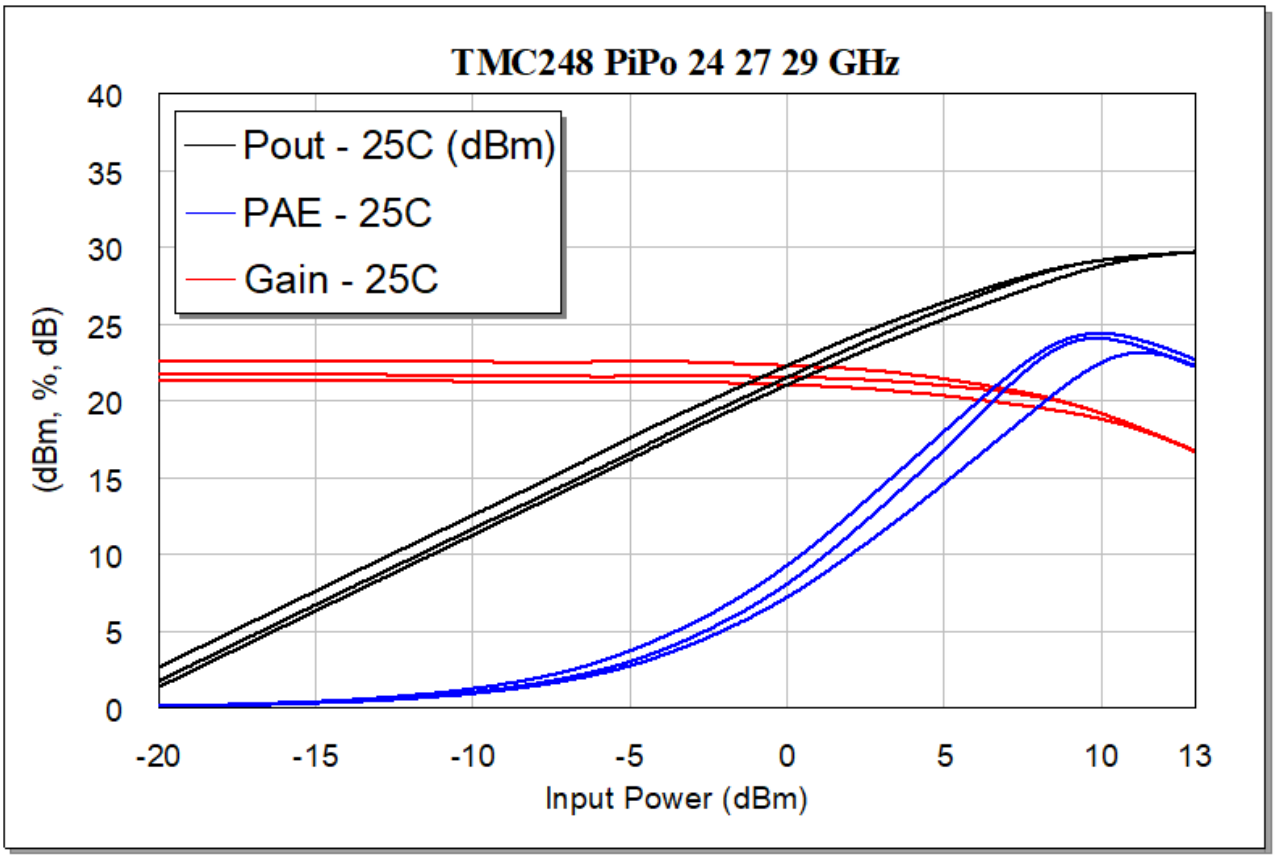
TMC248 PiPo 24 27 29 GHz
Pout - 25C (dBm)
PAE - 25C
Gain - 25C
(dBm, %, dB)
40
35
30
25
20
15
10
5
0
-20
-15
-10
-5
0
5
10
13
Input Power (dBm)

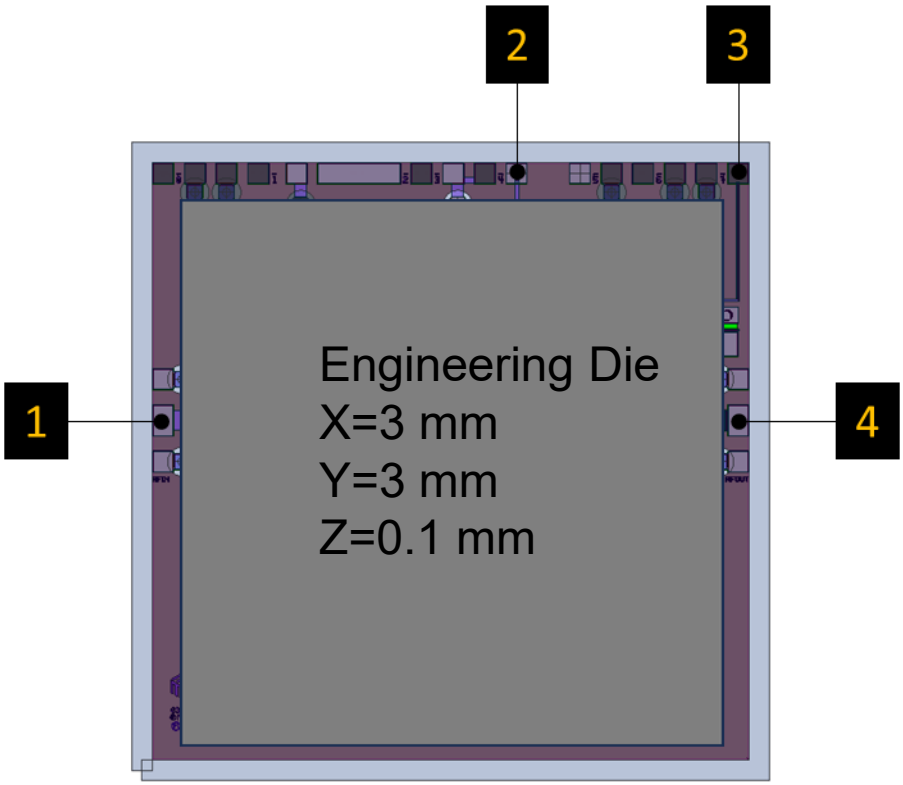

Pad #	Function
1	RF INPUT
2	VDD BIAS
3	VGG BIAS
4	RF OUTPUT

1. **DXF and detailed assembly drawings are available on request.**

Assembly Diagram

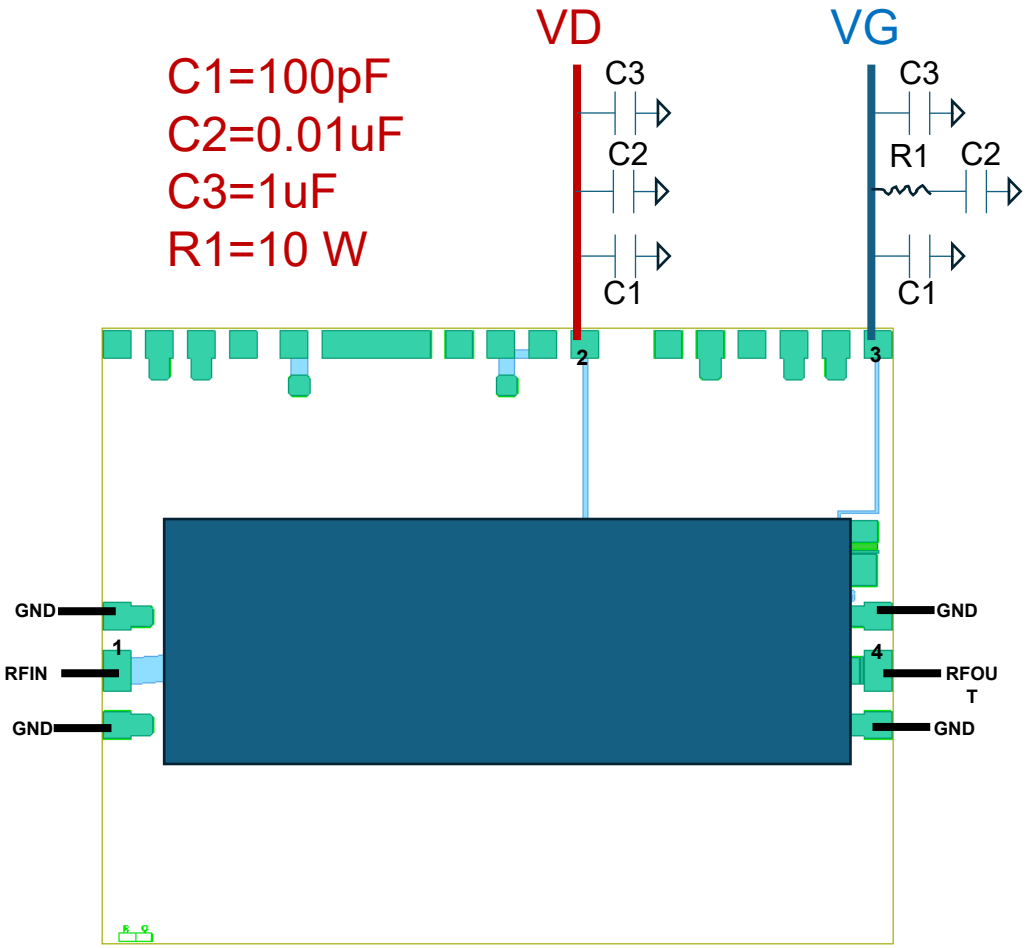

1) Place C1 very close to the chip
2) Use GSG connection for RF ports

Absolute Maximum Ratings

TMC248	Absolute Maximum Ratings
Drain Bias Voltage (VDD)	+30V
Gate Bias Voltage (VG1)	-8 to 0V
Gate Bias Current (IG1)	+5mA
Input Power, CW, VD = 23 V, VSWR 4:1, 85 °C	+25 dBm
Channel Temperature	210 °C
Thermal Resistance (channel to die bottom)	16.8 °C/W
Storage Temperature	-65 to +150 °C
Operating Temperature for MTTF > 1E6 hours	-55 to +125 °C



Electrostatic Discharge Caution

This integrated circuit can be damaged by ESD. mmTron Inc. recommends that all integrated circuits be handled with appropriate precautions. Failure to observe proper handling and installation procedures can cause damage. ESD damage can range from subtle performance degradation to complete device failure. Precision integrated circuits may be more susceptible to damage because very small parametric changes could cause the device not to meet its published specifications. III-V MMICs are ESD-sensitive. Preventative ESD measures must be employed in all aspects of storage, handling, and assembly. MMIC ESD precautions, handling considerations, and die-attach and bonding methods are critical factors in successful III-V MMIC performance and reliability.



RoHS Compliant

This part is RoHS compliant, meeting the requirements of the EU Restriction of Hazardous Substances Directive 2002/95/EC, commonly known as RoHS. Six substances are regulated: lead, mercury, cadmium, chromium VI (hexavalent chromium), polybrominated biphenyls (PBB), and polybrominated biphenyl ethers (PBDE). RoHS compliance requires that any residual concentration of these substances is below the Directive's maximum concentration values (MCV): cadmium 100ppm by weight and all others 1000ppm by weight.

Disclaimer and Warranty Statement

© 2025 mmTron Inc. (“mmTron”). All rights reserved.

The information contained in this datasheet is for reference only. All specifications are subject to change without prior notice.
Except as provided in its Terms and Conditions of Sale or any separate agreement, mmTron assumes no liability or responsibility whatsoever, including for (i) errors or omissions in these materials; (ii) failure to update these materials; or (iii) conflicts or incompatibilities arising from future changes to specifications and product descriptions, which mmTron may make at any time, without notice. These materials grant no license, express or implied, to any intellectual property rights. THESE MATERIALS ARE PROVIDED "AS IS" WITH NO WARRANTY OR LIABILITY, EXPRESS OR IMPLIED, RELATING TO SALE AND/OR USE OF mmTron PRODUCTS INCLUDING FITNESS FOR A PARTICULAR PURPOSE, MERCHANTABILITY, INFRINGEMENT OF INTELLECTUAL PROPERTY RIGHT, ACCURACY OR COMPLETENESS, OR SPECIAL, INDIRECT, INCIDENTAL, OR CONSEQUENTIAL DAMAGES WHICH MAY RESULT FROM USE OF THESE MATERIALS.

mmTron products are not intended for use in medical, lifesaving or life sustaining applications. mmTron customers using or selling mmTron products for use in such applications do so at their own risk and agree to fully indemnify mmTron for any damages resulting from such improper use or sale. These items are controlled by the U.S. Government and authorized for export only to the country of ultimate destination for use by the ultimate consignee or end-user(s) herein identified. They may not be resold, transferred, or otherwise disposed of, to any other country or to any person other than the authorized ultimate consignee or end-user(s), either in their original form or after being incorporated into other items, without first obtaining approval from the U.S. government or as otherwise authorized by U.S. law and regulations’.
The product layout, and specification are mmTron Proprietary and confidential information. The recipient agrees not to copy, alter, modify, reverse engineer, or attempt to derive the composition or underlying information, structure or ideas of any Confidential Information and must not remove, overprint, deface or change any notice of confidentiality, copyright, trademark, logo, legend or other notices of ownership from any originals or copies of mmTron’s information.