mmTron
Unleashing the mmWave Frontier

TMC167
24-31 GHz Power Amplifier

Product Features

- RF frequency: 24 to 31 GHz
- Linear Gain: 23 dB
- Psat: 1 W
- Bare Die: X=3.4, Y=2.02, Z=0.1 mm
- Package Size: 20-pin, X=5.0, Y=5.0 mm
- DC Power: 6 VDC, 740 mA

Applications

- SATCOM
- mmWave 5G FWA
- Point-to-Point Radios and VSATs
- Fiber Optics
- Military, EW and Space

Product Description

The TMC167 GaAs Power amplifier is a high linearity device, available in bare die or in a 5x5 air-cavity package, designed for use in mmWave 5G, Radios, Military, EW and Space applications. The TMC167 is a 50Ω matched design providing 1W of saturated power from 24 to 31 GHz and eliminates the need for RF port matching. Both bond pad and backside metallization are Au-based that is compatible with ribbon and wedge bonding and high conductivity epoxy and eutectic die attach methods. The bare die version is available under TMC167-D, X=3.4 mm, Y=2.02 mm, Z=0.1mm.

Functional Block Diagram

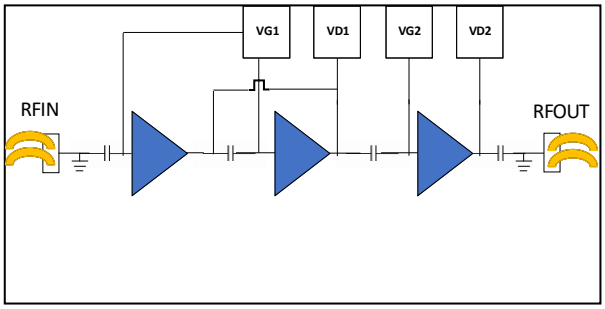

Ordering Information

Part No.	Description
TMC167-D	Bare Die
TMC167-P5	Packaged Device
TMC165-EVB[1]	Evaluation Board

1- Contact mmTron for further information

mmTron Inc. reserves the right to make changes to the product(s) or information contained herein without notice
Version 3.5 2025 © mmTron, Inc.
For additional information and Application support, please visit https://www.mmTron.com/contact

Bare Die (TMC167-D) Electrical Performance

(Ta = 25 °C, V_{DD} = 6V, I_D =760 mA)

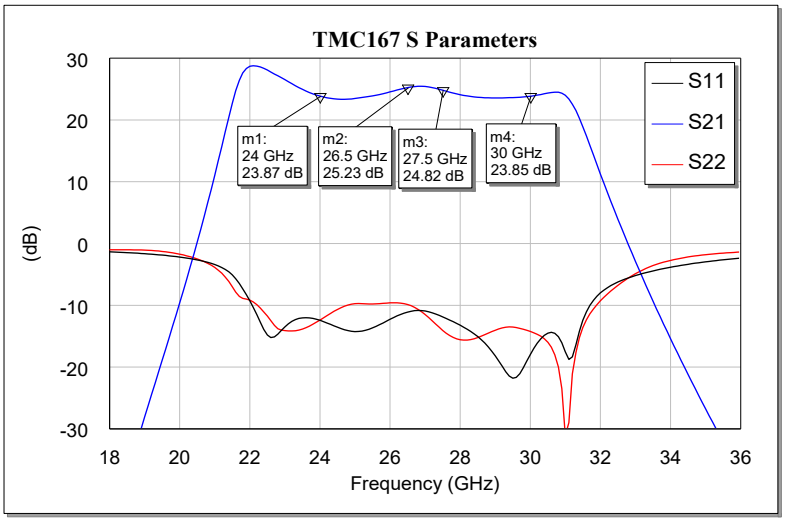

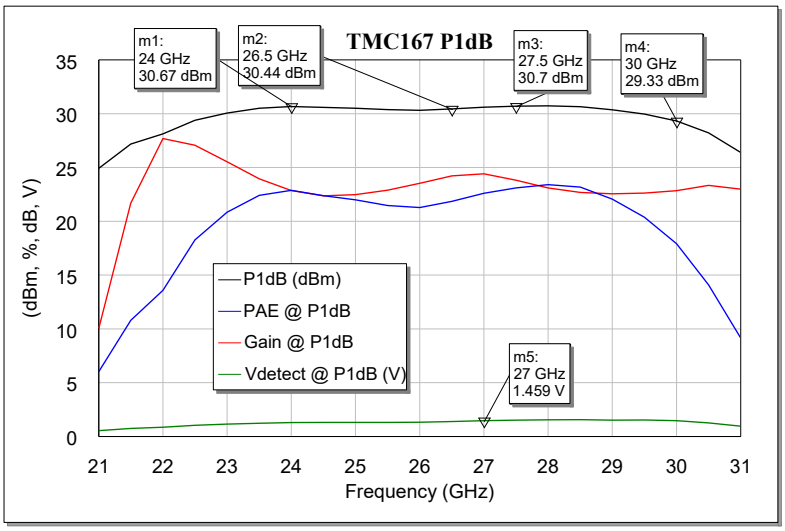

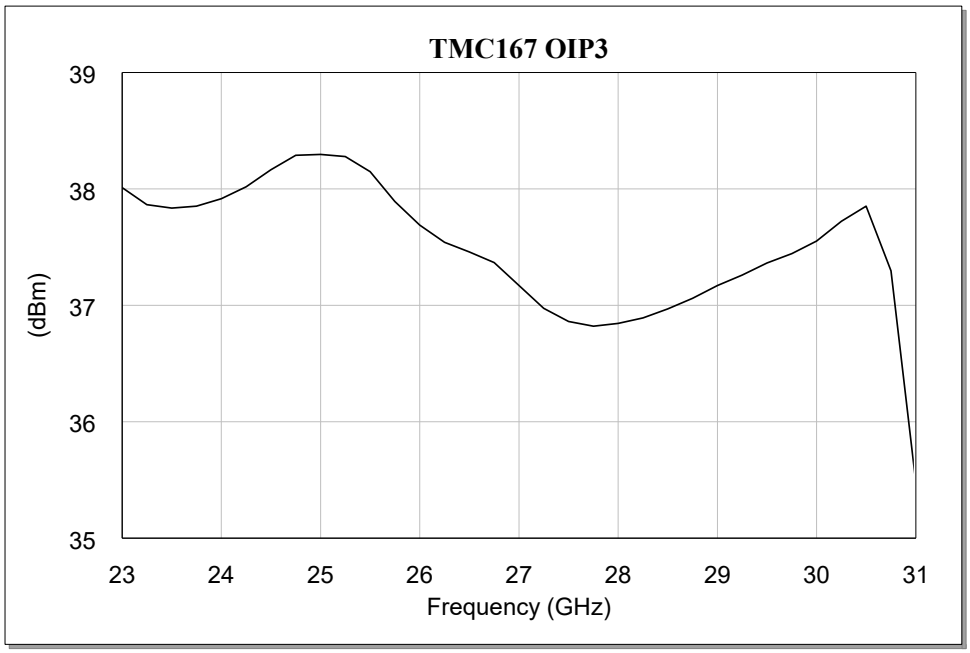
TMC167 OIP3
39
38
37
36
35
(dBm)
23
24
25
26
27
28
29
30
31
Frequency (GHz)

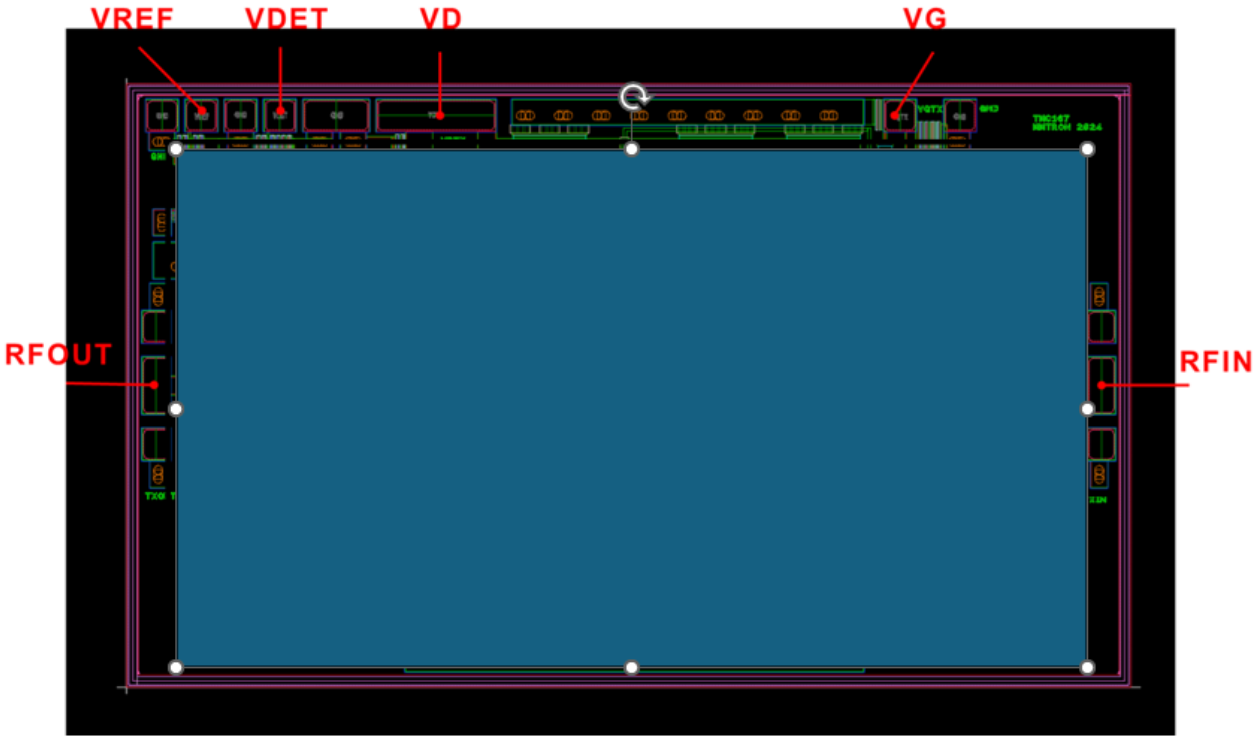
VREF
VDET
VD
VG
RFOUT
RFIN



Electrostatic Discharge Caution

This integrated circuit can be damaged by ESD. mmTron Inc. recommends that all integrated circuits be handled with appropriate precautions. Failure to observe proper handling and installation procedures can cause damage. ESD damage can range from subtle performance degradation to complete device failure. Precision integrated circuits may be more susceptible to damage because very small parametric changes could cause the device not to meet its published specifications. III-V MMICs are ESD-sensitive. Preventative ESD measures must be employed in all aspects of storage, handling, and assembly. MMIC ESD precautions, handling considerations, and die-attach and bonding methods are critical factors in successful III-V MMIC performance and reliability.



RoHS Compliant

This part is RoHS compliant, meeting the requirements of the EU Restriction of Hazardous Substances Directive 2002/95/EC, commonly known as RoHS. Six substances are regulated: lead, mercury, cadmium, chromium VI (hexavalent chromium), polybrominated biphenyls (PBB), and polybrominated biphenyl ethers (PBDE). RoHS compliance requires that any residual concentration of these substances is below the Directive's maximum concentration values (MCV): cadmium 100ppm by weight and all others 1000ppm by weight.

Disclaimer and Warranty Statement

© 2025 mmTron Inc. (“mmTron”). All rights reserved.

The information contained in this datasheet is for reference only. All specifications are subject to change without prior notice.
Except as provided in its Terms and Conditions of Sale or any separate agreement, mmTron assumes no liability or responsibility whatsoever, including for (i) errors or omissions in these materials; (ii) failure to update these materials; or (iii) conflicts or incompatibilities arising from future changes to specifications and product descriptions, which mmTron may make at any time, without notice. These materials grant no license, express or implied, to any intellectual property rights. THESE MATERIALS ARE PROVIDED "AS IS" WITH NO WARRANTY OR LIABILITY, EXPRESS OR IMPLIED, RELATING TO SALE AND/OR USE OF mmTron PRODUCTS INCLUDING FITNESS FOR A PARTICULAR PURPOSE, MERCHANTABILITY, INFRINGEMENT OF INTELLECTUAL PROPERTY RIGHT, ACCURACY OR COMPLETENESS, OR SPECIAL, INDIRECT, INCIDENTAL, OR CONSEQUENTIAL DAMAGES WHICH MAY RESULT FROM USE OF THESE MATERIALS.

mmTron products are not intended for use in medical, lifesaving or life sustaining applications. mmTron customers using or selling mmTron products for use in such applications do so at their own risk and agree to fully indemnify mmTron for any damages resulting from such improper use or sale. These items are controlled by the U.S. Government and authorized for export only to the country of ultimate destination for use by the ultimate consignee or end-user(s) herein identified. They may not be resold, transferred, or otherwise disposed of, to any other country or to any person other than the authorized ultimate consignee or end-user(s), either in their original form or after being incorporated into other items, without first obtaining approval from the U.S. government or as otherwise authorized by U.S. law and regulations’.
The product layout, and specification are mmTron Proprietary and confidential information. The recipient agrees not to copy, alter, modify, reverse engineer, or attempt to derive the composition or underlying information, structure or ideas of any Confidential Information and must not remove, overprint, deface or change any notice of confidentiality, copyright, trademark, logo, legend or other notices of ownership from any originals or copies of mmTron’s information.